Prestressed Micromirror

Introduction

One method of creating spring-like structures or inducing curvature in plated structures is to plate materials onto a substrate such that the layer has a residual stress after the plating process. The plating process can control this stress, which can be either compressive or tensile, even for similar materials. The automotive industry has studied this phenomenon at length because highly stressed chrome is appreciably shinier than nonstressed chrome. MEMS device manufacturers sometimes use this effect to create curved cantilevers or spring-loaded micromechanical structures that lift off the substrate when deliberately undercut by an etchant.

One such device is the electrostatically controlled micromirror. It is typically quite small, and arrays of such devices can implement a projection system. They serve as optical redirectors and similar reflection devices. This section shows the fundamentals of how to set up and solve lift-off of a prestressed plated device.

Model Definition

This single-physics model uses 3D structural analysis. The micromirror has a stiff, flat, reflective center portion, which is supported by four prestressed plated cantilever springs. To keep the mesh size small and the solution time reasonable, this exercise studies the plated structure with two layers. It also assumes that the plating process creates equal and opposite (compressive and tensile) initial stresses in the top and bottom layers. This convenience makes the model straightforward to set up. You can make the initial-stress distribution as complex as desired and set it up as shown in this example. Depending on the magnitude of the deformations, you are likely best advised to solve such simulations with a large-deformation analysis using a nonlinear or parametric nonlinear solver, noting that the latter is more likely to converge. Thus this illustrative model uses the large-deformation analysis type with both the linear and parametric linear solvers.

Note in particular that a 3D structure with thin layers such as the one in this model leads to a very large unstructured tetrahedral mesh. To avoid this case, this example first generates a 2D quadrilateral mesh by mesh mapping and then extrudes it into 3D to produce a mesh with hexahedral (brick) elements. This way you can have the mesher create structured elements with a high aspect ratio.

One of the key process parameters you wish to determine in this class of problem is generally what prestress level is necessary to result in a desired lift-off. Another common concern is how much effect variations in the prestress might have on displacement. A parametric study answers this question.

Results and Discussion

The following two images compare lift-off for aluminum and steel plates. The steel, being stiffer than aluminum, deforms less.

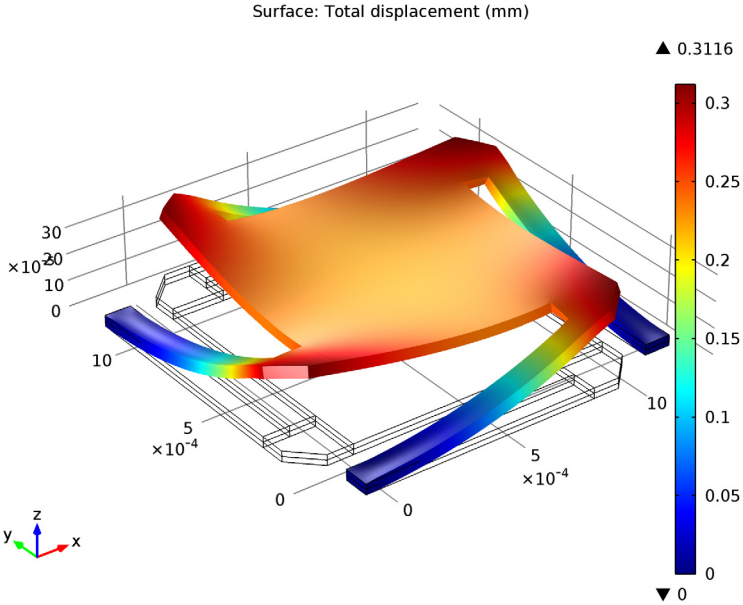

Figure 1: Lift-off for aluminum.

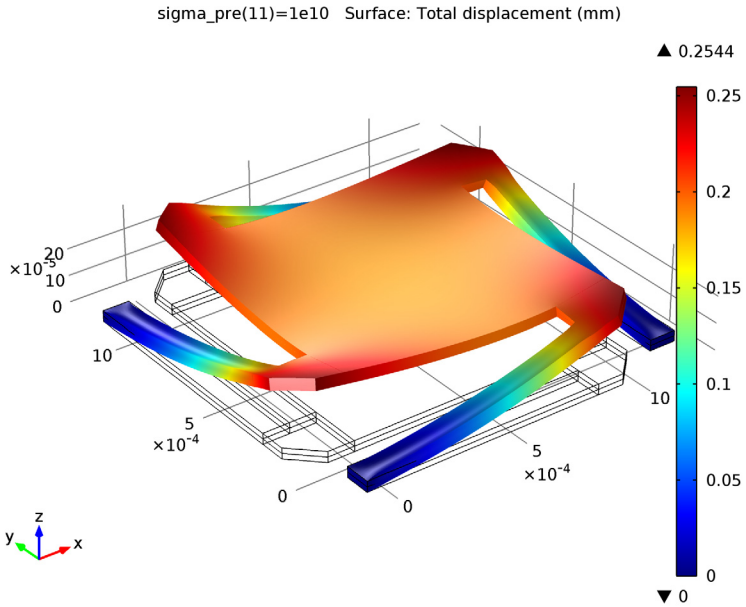

Figure 2: Lift-off for steel.

The following two figures show the mirror response to the different levels of applied prestress. According to Figure 3, the center point deflection is almost linearly dependent of the prestress. Figure 4 shows the mirror's curvature along its centerline

for different values of prestress. In line with expectations, increasing the stress bends the mirror more.

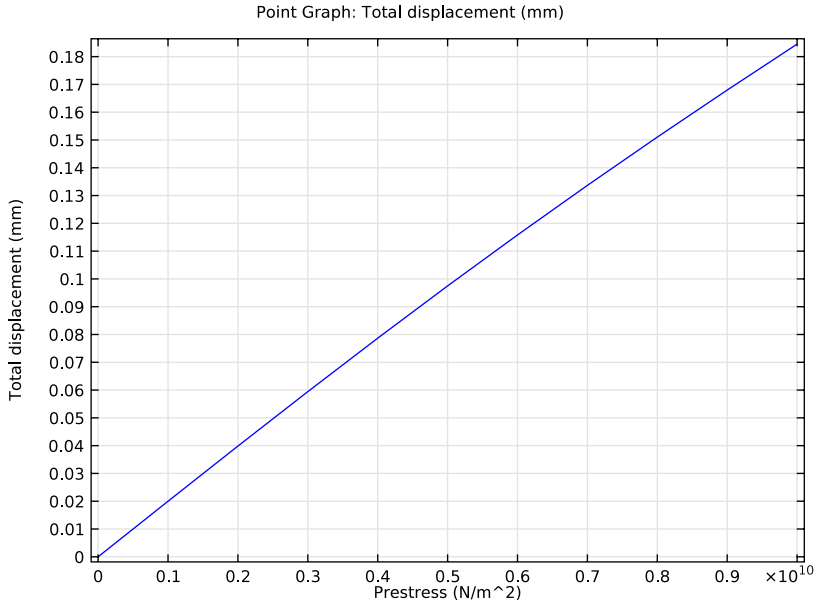

Figure 3: Total deflection of the center of the mirror for different prestress levels.

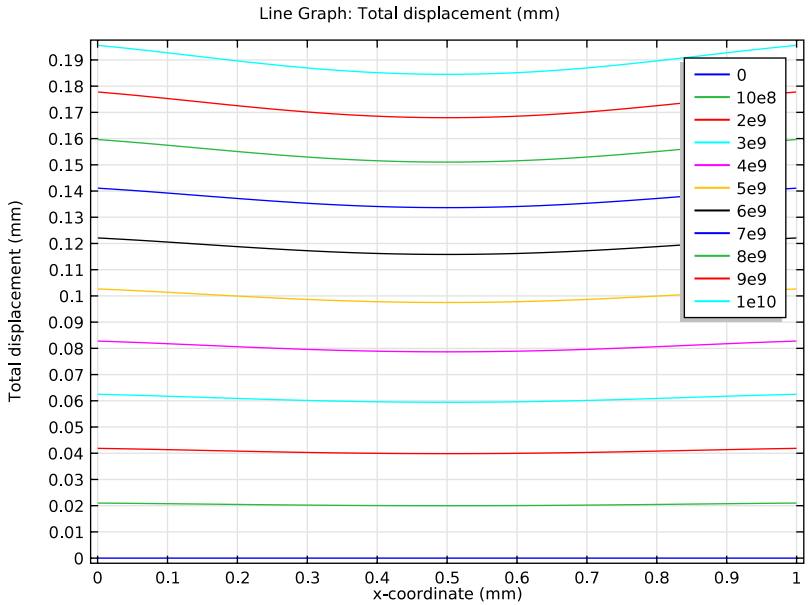

Figure 4: Mirror curvature along the centerline for different prestress levels.

Reference

1. G. Kovacs, *Micromachined Transducers Sourcebook*, WCM McGraw-Hill, 1998.

Model Library path: `MEMS_Module/Actuators/micromirror`

Modeling Instructions

From the **File** menu, choose **New**.

NEW

1 In the **New** window, click the **Model Wizard** button.

MODEL WIZARD

1 In the **Model Wizard** window, click the **3D** button.

2 In the **Select physics** tree, select **Structural Mechanics>Solid Mechanics (solid)**.

3 Click the **Add** button.

4 Click the **Study** button.

5 In the tree, select **Preset Studies>Stationary**.

6 Click the **Done** button.

GLOBAL DEFINITIONS

Parameters

1 On the **Home** toolbar, click **Parameters**.

2 In the **Parameters** settings window, locate the **Parameters** section.

3 In the table, enter the following settings:

Name	Expression	Value	Description
sigma_pre	5[GPa]	5.000E9 Pa	Initial normal stress

GEOMETRY 1

On the **Geometry** toolbar, click **Work Plane**.

Square 1

In the **Model Builder** window, under **Component 1>Geometry 1>Work Plane 1** right-click **Plane Geometry** and choose **Square**.

Plane Geometry

In the **Model Builder** window, under **Component 1>Geometry 1>Work Plane 1>Plane Geometry** right-click **Square 1** and choose **Build Selected**.

Square 2

1 In the **Model Builder** window, under **Component 1>Geometry 1>Work Plane 1** right-click **Plane Geometry** and choose **Square**.

2 In the **Square** settings window, locate the **Size** section.

3 In the **Side length** edit field, type 0.2.

4 Locate the **Position** section. In the **yw** edit field, type 1.

5 Click the **Build Selected** button.

Square 3

1 Right-click **Plane Geometry** and choose **Square**.

2 In the **Square** settings window, locate the **Size** section.

3 In the **Side length** edit field, type `0.2`.

4 Locate the **Position** section. In the **xw** edit field, type `1`.

5 In the **yw** edit field, type `0.8`.

6 Click the **Build Selected** button.

Square 4

1 Right-click **Plane Geometry** and choose **Square**.

2 In the **Square** settings window, locate the **Size** section.

3 In the **Side length** edit field, type `0.2`.

4 Locate the **Position** section. In the **xw** edit field, type `0.8`.

5 In the **yw** edit field, type `-0.2`.

Square 5

1 Right-click **Plane Geometry** and choose **Square**.

2 In the **Square** settings window, locate the **Position** section.

3 In the **xw** edit field, type `0.2`.

4 Locate the **Size** section. In the **Side length** edit field, type `0.2`.

5 Locate the **Position** section. In the **xw** edit field, type `-0.2`.

6 Click the **Build Selected** button.

7 Click the **Zoom Extents** button on the Graphics toolbar.

Chamfer 1

1 On the **Work plane** toolbar, click **Chamfer**.

2 On the object **sq5**, select Point 1 only.

3 On the object **sq3**, select Point 3 only.

4 On the object **sq4**, select Point 2 only.

5 On the object **sq2**, select Point 4 only.

6 In the **Chamfer** settings window, locate the **Distance** section.

7 In the **Distance from vertex** edit field, type `0.1`.

8 Click the **Build Selected** button.

9 Click the **Zoom Extents** button on the Graphics toolbar.

Rectangle 1

1 Right-click **Plane Geometry** and choose **Rectangle**.

2 In the **Rectangle** settings window, locate the **Size** section.

3 In the **Width** edit field, type `0.9`.

4 In the **Height** edit field, type `0.1`.

5 Locate the **Position** section. In the **xw** edit field, type `0.2`.

6 In the **yw** edit field, type `1.1`.

7 Click the **Build Selected** button.

Rectangle 2

1 Right-click **Plane Geometry** and choose **Rectangle**.

2 In the **Rectangle** settings window, locate the **Size** section.

3 In the **Width** edit field, type `0.1`.

4 In the **Height** edit field, type `0.9`.

5 Locate the **Position** section. In the **xw** edit field, type `1.1`.

6 In the **yw** edit field, type `-0.1`.

7 Click the **Build Selected** button.

Rectangle 3

1 Right-click **Plane Geometry** and choose **Rectangle**.

2 In the **Rectangle** settings window, locate the **Size** section.

3 In the **Width** edit field, type `0.9`.

4 In the **Height** edit field, type `0.1`.

5 Locate the **Position** section. In the **xw** edit field, type `-0.1`.

6 In the **yw** edit field, type `-0.2`.

Rectangle 4

1 Right-click **Plane Geometry** and choose **Rectangle**.

2 In the **Rectangle** settings window, locate the **Size** section.

3 In the **Width** edit field, type `0.1`.

4 In the **Height** edit field, type `0.9`.

5 Locate the **Position** section. In the **xw** edit field, type `-0.2`.

6 In the **yw** edit field, type `0.2`.

7 Click the **Build Selected** button.

Scale 1

1 On the **Work plane** toolbar, click **Scale**.

2 Click the **Select box** in the **Graphics** window and then press Ctrl+A to select all objects.

3 In the **Scale** settings window, locate the **Scale Factor** section.

4 In the **Factor** edit field, type `1e-3`.

5 Click the **Build Selected** button.

6 Click the **Zoom Extents** button on the Graphics toolbar.

Extrude 1

1 On the **Geometry** toolbar, click **Extrude**.

2 In the **Extrude** settings window, locate the **Distances from Plane** section.

3 In the table, enter the following settings:

Distances (m)
20e-6
40e-6

4 Click the **Build Selected** button.

Form Union

In the **Model Builder** window, under **Component 1>Geometry 1** right-click **Form Union** and choose **Build Selected**.

MATERIALS

On the **Home** toolbar, click **Add Material**.

ADD MATERIAL

1 Go to the **Add Material** window.

2 In the tree, select **Built-In>Aluminum**.

3 In the **Add material** window, click **Add to Component**.

MATERIALS

Aluminum

By default the first material you add applies to all domains, so you do not need to change the settings in the Geometric Scope section.

You can inspect which material properties are used and what values they take in the Material Contents table.

SOLID MECHANICS

Linear Elastic Material 1

In the **Model Builder** window, expand the **Component 1>Solid Mechanics** node.

Initial Stress and Strain 1

1 Right-click **Linear Elastic Material 1** and choose **Initial Stress and Strain**.

2 In the **Initial Stress and Strain** settings window, locate the **Domain Selection** section.

3 Click **Clear Selection**.

4 Select Domains 4, 6, 12, and 18 only.

5 Locate the **Initial Stress and Strain** section. In the $\mathbf{S}_0$ table, enter the following settings:

sigma_pre	0	0
0	sigma_pre	0
0	0	0

Initial Stress and Strain 2

1 Right-click **Linear Elastic Material 1** and choose **Initial Stress and Strain**.

2 In the **Initial Stress and Strain** settings window, locate the **Domain Selection** section.

3 Click **Clear Selection**.

4 Select Domains 3, 5, 11, and 17 only.

5 Locate the **Initial Stress and Strain** section. In the $\mathbf{S}_0$ table, enter the following settings:

-sigma_pre	0	0
0	-sigma_pre	0
0	0	0

Fixed Constraint 1

1 On the **Physics** toolbar, click **Boundaries** and choose **Fixed Constraint**.

2 Select Boundaries 15–17, 20, 92, 95, 102, and 103 only.

3 Click the **Zoom Extents** button on the Graphics toolbar.

MESH 1

Mapped 1

1 In the **Model Builder** window, under **Component 1** right-click **Mesh 1** and choose **Mapped**.

2 In the **Mapped** settings window, locate the **Boundary Selection** section.

3 Click **Clear Selection**.

4 Select Boundaries 7, 14, 23, 38, 47, 62, 71, 88, and 97 only.

Distribution 1

1 Right-click **Component 1>Mesh 1>Mapped 1** and choose **Distribution**.

2 Select Edges 15, 29, 57, 62, 88, 101, 134, and 177 only.

3 In the **Distribution** settings window, locate the **Distribution** section.

4 In the **Number of elements** edit field, type 12.

Distribution 2

1 Right-click **Mapped 1** and choose **Distribution**.

2 Select Edges 21, 28, 47, 87, 114, 142, 155, and 170 only.

3 In the **Distribution** settings window, locate the **Distribution** section.

4 In the **Number of elements** edit field, type 3.

Distribution 3

1 Right-click **Mapped 1** and choose **Distribution**.

2 Select Edges 7, 80, 109, and 182 only.

3 In the **Distribution** settings window, locate the **Distribution** section.

4 In the **Number of elements** edit field, type 6.

Mapped 1

1 Right-click **Mapped 1** and choose **Build Selected**.

2 Click the **Zoom Extents** button on the Graphics toolbar.

Swept 1

1 Right-click **Mesh 1** and choose **Swept**.

2 In the **Model Builder** window, under **Component 1>Mesh 1** right-click **Swept 1** and choose **Build Selected**.

3 Click the **Zoom Extents** button on the Graphics toolbar.

STUDY 1

Step 1: Stationary

1 In the **Model Builder** window, under **Study 1** click **Step 1: Stationary**.

2 In the **Stationary** settings window, locate the **Study Settings** section.

3 Select the **Include geometric nonlinearity** check box.

Solver 1

1 On the **Study** toolbar, click **Show Default Solver**.

2 In the **Model Builder** window, expand the **Study 1>Solver Configurations** node.

3 In the **Model Builder** window, expand the **Solver 1** node.

4 In the **Model Builder** window, expand the **Study 1>Solver Configurations>Solver 1>Stationary Solver 1** node, then click **Fully Coupled 1**.

5 In the **Fully Coupled** settings window, click to expand the **Method and termination** section.

6 Locate the **Method and Termination** section. From the **Nonlinear method** list, choose **Constant (Newton)**.

7 In the **Maximum number of iterations** edit field, type 25.

Because the nonlinear solver needs about 10 iterations to converge for this problem, this setting provides a safe margin.

8 On the **Home** toolbar, click **Compute**.

RESULTS

Stress (solid)

The following steps reproduce the displacement plot shown in Figure 1.

1 In the **Model Builder** window, expand the **Stress (solid)** node, then click **Surface 1**.

2 In the **Surface** settings window, locate the **Expression** section.

3 Select **Solid Mechanics>Displacement>Total displacement (solid.disp)** in the **Replace expression menu**, which is accessed in the upper-right corner of the section. From the **Unit** list, choose **mm**.

4 On the **3D plot group** toolbar, click **Plot**.

5 Click the **Zoom Extents** button on the Graphics toolbar.

MATERIALS

Change the plate material to steel.

ADD MATERIAL

1 Go to the **Add Material** window.

2 In the tree, select **Built-In>Structural steel**.

3 In the **Add material** window, click **Add to Component**.

MATERIALS

Structural steel

1 In the **Model Builder** window, under **Component 1>Materials** click **Structural steel**.

2 Select Domains 1, 2, 7–10, and 13–16 only.

The remaining domains keep their previous material, that is aluminum.

STUDY 1

Parametric Sweep

1 On the **Study** toolbar, click **Parametric Sweep**.

2 In the **Parametric Sweep** settings window, locate the **Study Settings** section.

3 Click **Add**.

4 In the table, enter the following settings:

Parameter names	Parameter value list
sigma_pre	`range(0,1e9,10e9)`

To keep the sequence Solver 1 intact, disable it and generate a new solver sequence.

Solver 1

In the **Model Builder** window, under **Study 1>Solver Configurations** right-click **Solver 1** and choose **Disable**.

Solver 2

1 On the **Study** toolbar, click **Show Default Solver**.

Repeat the settings you previously made for Solver 1.

2 In the **Model Builder** window, expand the **Study 1>Solver Configurations>Solver 2>Stationary Solver 1** node, then click **Fully Coupled 1**.

3 In the **Fully Coupled** settings window, locate the **Method and Termination** section.

4 From the **Nonlinear method** list, choose **Constant (Newton)**.

5 In the **Maximum number of iterations** edit field, type 25.

6 In the **Model Builder** window, right-click **Solver 2** and choose **Compute**.

RESULTS

Stress (solid) 1

Follow the steps below to reproduce the plot in Figure 2.

1. In the **Model Builder** window, expand the **Stress (solid) 1** node, then click **Surface 1**.
2. In the **Surface** settings window, locate the **Expression** section.
3. Select **Solid Mechanics>Displacement>Total displacement (solid.disp)** in the **Replace expression menu**, which is accessed in the upper-right corner of the section. From the **Unit** list, choose **mm**.
4. On the **3D plot group** toolbar, click **Plot**.
5. Click the **Zoom Extents** button on the Graphics toolbar.

Next, reproduce the plot in Figure 3, showing the total deflection at the center of the mirror as a function of the prestress level.

Data Sets

1. On the **Results** toolbar, click **Cut Point 3D**.
2. In the **Cut Point 3D** settings window, locate the **Data** section.
3. From the **Data set** list, choose **Solution 2**.
4. Locate the **Point Data** section. In the **X** edit field, type `0.5e-3`.
5. In the **Y** edit field, type `0.5e-3`.
6. In the **Z** edit field, type `40e-6`.

1D Plot Group 3

1. On the **Home** toolbar, click **Add Plot Group** and choose **1D Plot Group**.
2. In the **1D Plot Group** settings window, locate the **Data** section.
3. From the **Data set** list, choose **Cut Point 3D 1**.
4. Locate the **Plot Settings** section. Select the **x-axis label** check box.
5. In the associated edit field, type `Prestress (N/m^2)`.
6. On the **1D plot group** toolbar, click **Point Graph**.
7. In the **Point Graph** settings window, locate the **y-axis data** section.
8. Select **Solid Mechanics>Displacement>Total displacement (solid.disp)** in the **Replace expression menu**, which is accessed in the upper-right corner of the section. From the **Unit** list, choose **mm**.
9. On the **1D plot group** toolbar, click **Plot**.

Finally, reproduce the plot in Figure 4 of the total deflection along the centerline for the prestress levels included in the parametric sweep.

Data Sets

1 On the **Results** toolbar, click **Cut Line 3D**.

2 In the **Cut Line 3D** settings window, locate the **Data** section.

3 From the **Data set** list, choose **Solution 2**.

4 Locate the **Line Data** section. In row **Point 1**, set **Y** to `0.5e-3`.

5 In row **Point 1**, set **Z** to `40e-6`.

6 In row **Point 2**, set **X** to `1e-3`.

7 In row **Point 2**, set **Y** to `0.5e-3`.

8 In row **Point 2**, set **Z** to `40e-6`.

1D Plot Group 4

1 On the **Home** toolbar, click **Add Plot Group** and choose **1D Plot Group**.

2 In the **1D Plot Group** settings window, locate the **Data** section.

3 From the **Data set** list, choose **Cut Line 3D 1**.

4 On the **1D plot group** toolbar, click **Line Graph**.

Keep the default plot expression.

5 In the **Line Graph** settings window, locate the **y-Axis Data** section.

6 From the **Unit** list, choose **mm**.

7 Locate the **x-axis data** section. Select **Geometry>Coordinate (Spatial)>x-coordinate (x)** in the **Replace expression menu**, which is accessed in the upper-right corner of the section. From the **Unit** list, choose **mm**. From the **Unit** list, choose **mm**.

8 Click to expand the **Legends** section. Select the **Show legends** check box.

9 On the **1D plot group** toolbar, click **Plot**.